Power saving	1. Mode:1280×1024@60Hz 2. Pattern: full white 3. Brightness: Max. 4. Contrast: Default	at each modes	Power saving	at each modes
	Power Key Off			

5. Level 2 Circuit Board and Standard Parts Replacement

5.1. Block diagram

Power Board

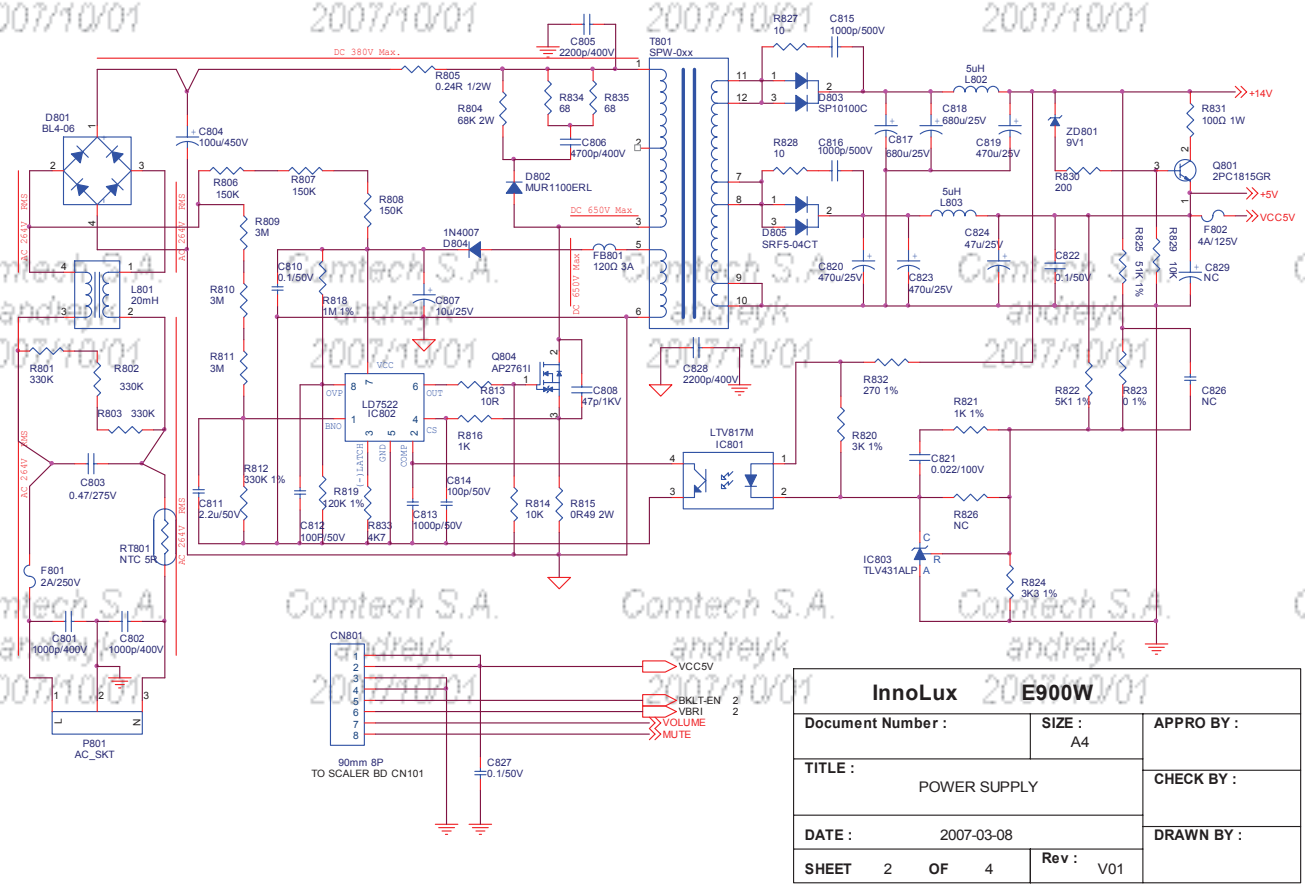

InnoLux	E900W		
Document Number :	SIZE : A4	APPRO BY :	
TITLE : POWER SUPPLY		CHECK BY :	
DATE : 2007-03-08		DRAWN BY :	
SHEET 2 OF 4	Rev : V01		